* 0000800000001 *

Cambridge Assessment International Education

Cambridge IGCSE™

CANDIDATE NAME	

CENTRE NUMBER						CANDIDATE NUMBER				

* 3 6 3 6 4 1 0 9 9 0 *

DESIGN & TECHNOLOGY **0445/43**

Paper 4 Systems & Control **May/June 2025**

1 hour

You must answer on the question paper.

No additional materials are needed.

INSTRUCTIONS

- Section A: answer **all** questions.
- Section B: answer **one** question.
- Use a black or dark blue pen. You may use an HB pencil for any diagrams or graphs.
- Write your name, centre number and candidate number in the boxes at the top of the page.
- Answer in the space provided.
- Do **not** use an erasable pen or correction fluid.
- Do **not** write on any bar codes.
- You may use a calculator.

INFORMATION

- The total mark for this paper is 50.
- The number of marks for each question or part question is shown in brackets [ ].
- All dimensions are in millimetres unless otherwise stated.

This document has **20** pages. Any blank pages are indicated.

DC (CE/SW) 343374/2
© UCLES 2025

Section A

Answer **all** questions in this section.

1 **(a)** Name **two** fossil fuels.

1 .....

2 .....
[2]

(b) Explain how solar energy can be used to provide power at night.

.....

.....

..... [2]

2 Name the type of structure shown in Fig. 2.1.

Fig. 2.1

..... [1]

3 Give **one** reason for using triangulation in a structure.

..... [1]

DO NOT WRITE IN THIS MARGIN

4 Describe, using examples, the following forces that can act on a structure.

tension .....

.....

.....

torsion .....

.....

.....

static load .....

.....

.....
[6]

5 Explain why spur gears are used to transmit motion in a mechanism.

.....

.....

..... [2]

6 Describe how two shafts can be made to rotate in the same direction using spur gears.

.....

.....

..... [2]

7 Use sketches and notes to show a parallel linkage.

[2]

DO NOT WRITE IN THIS MARGIN

8 Complete Fig. 8.1 by naming the electronic symbols.

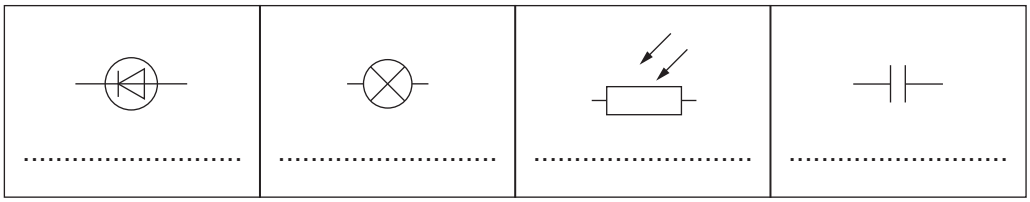

Fig. 8.1

[4]

9 Complete Fig. 9.1 by arranging the resistance values from the lowest value on the left to the highest value on the right.

4.7 kΩ **3 MΩ** **100 kΩ** **82 R**

lowest value **highest value**

Fig. 9.1

[3]

DO NOT WRITE IN THIS MARGIN

BLANK PAGE

DO NOT WRITE IN THIS MARGIN

Section B

Answer **one** question from this section.

10 Fig. 10.1 shows a concrete canopy over the front of a warehouse building.
The canopy is supported either side by steel structures that resist forces caused by the weight of the concrete canopy. A detailed view of one of the steel structures is shown.

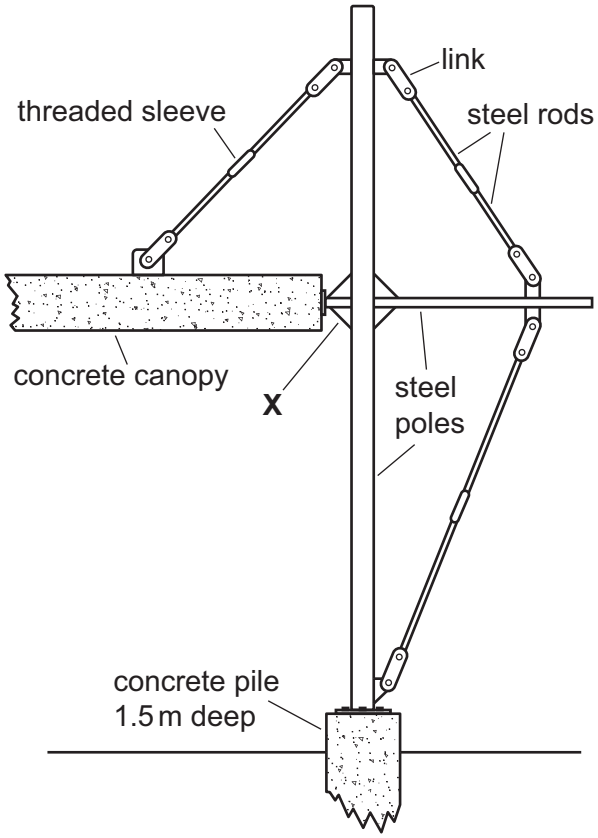

Fig. 10.1

(a) **(i)** Name the force acting on each of the steel rods.

..... [1]

(ii) Explain how the threaded sleeve can be used to provide adjustment on the steel rods.

.....

.....

.....

..... [3]

DO NOT WRITE IN THIS MARGIN

(iii) Part **X** in Fig. 10.1 is one of four features at the point where the steel poles are joined. Name part **X** and explain the part that it plays in supporting the concrete canopy.

.....

.....

.....

..... [3]

(iv) State the purpose of the links at each end of the steel rods.

.....

..... [1]

(v) A concrete pile 1.5 m deep is used as the foundation for the steel structure. Give **two** reasons why concrete is used as the foundation.

1 .....

2 .....
[2]

(b) Fig. 10.2 shows the same wheelbarrow loaded with bricks in two different ways.

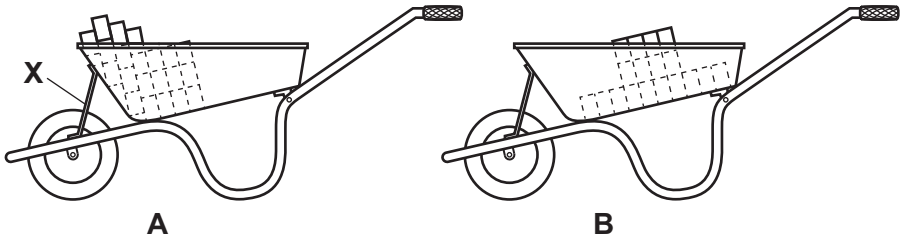

Fig. 10.2

(i) State the order of lever that is used in a wheelbarrow.

..... [1]

(ii) Name the type of structural member at **X**.

..... [1]

DO NOT WRITE IN THIS MARGIN

(iii) Explain the change in efficiency caused by the different methods of loading the wheelbarrow.

.....

.....

.....

..... [3]

(iv) Describe how equilibrium is maintained when a wheelbarrow is in use.

.....

.....

..... [2]

(v) Fig. 10.3 shows wheelbarrow **A** loaded with 38 bricks, each brick weighing 2.1 kg. Calculate the effort required to lift the loaded wheelbarrow.

1 kg = 9.81 N

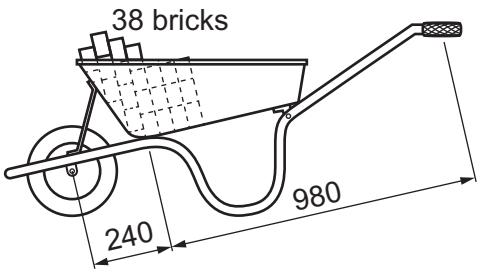

Fig. 10.3

.....

.....

.....

..... [3]

DO NOT WRITE IN THIS MARGIN

(c) Fig. 10.4 shows a roof truss made of softwood.

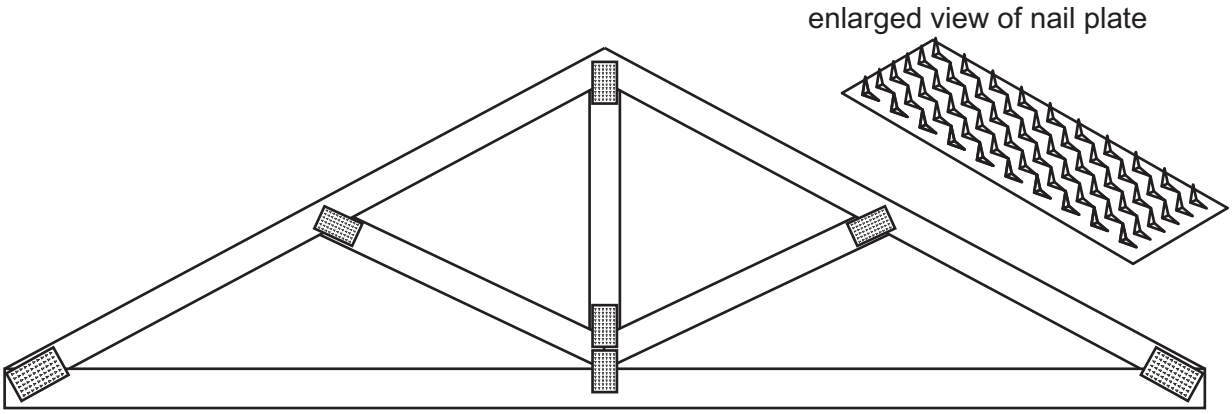

Fig. 10.4

(i) The softwood is joined using nail plates.
Give **two** advantages of using nail plates rather than traditional joints.

1 .....

.....

2 .....

.....
[2]

(ii) Describe the defects that a manufacturer would look for when selecting lengths of softwood for use in the roof truss.

.....

.....

.....

..... [3]

DO NOT WRITE IN THIS MARGIN

11 Fig. 11.1 shows two views of a badge-making machine which is used to press a clear plastic sheet over a paper badge and badge blank.

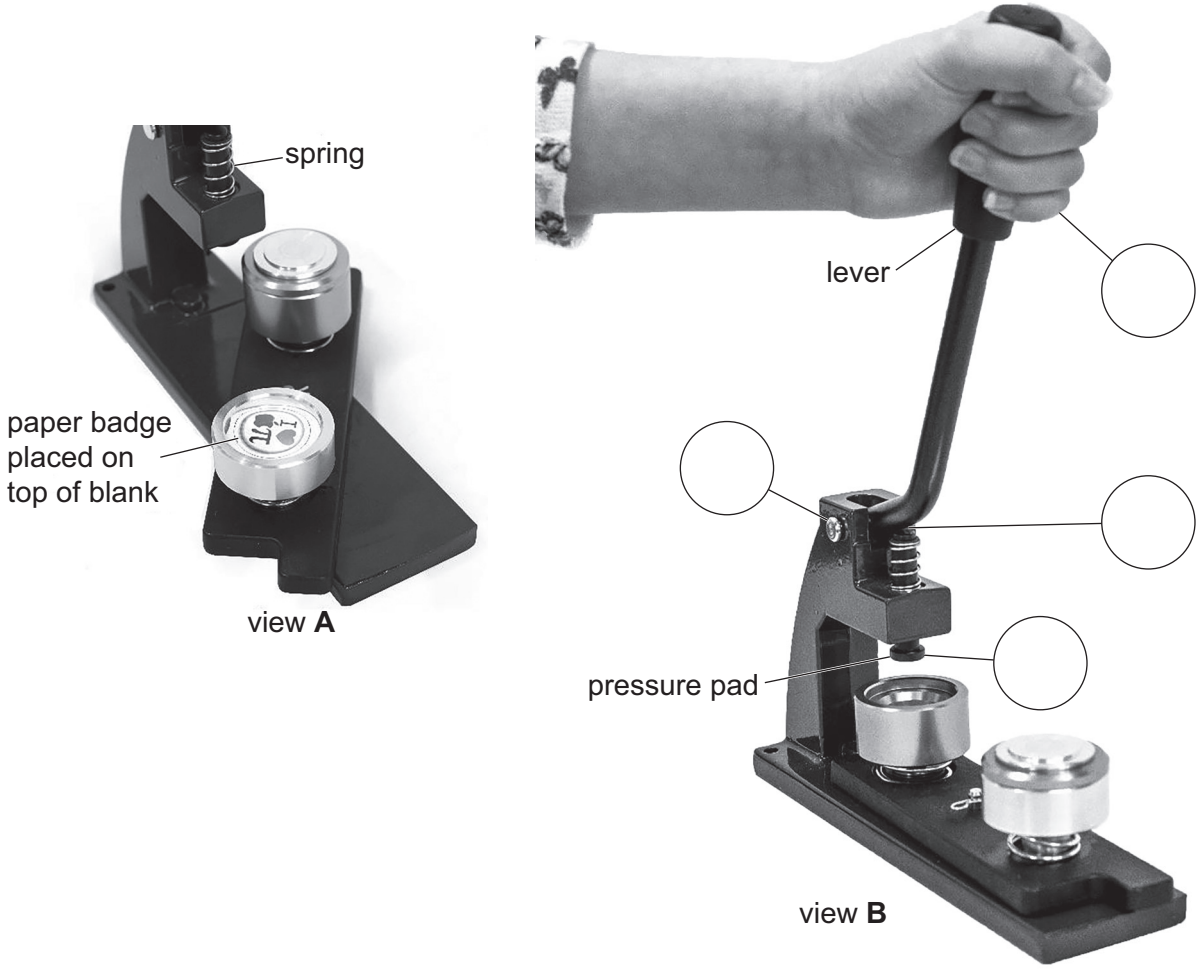

Fig. 11.1

(a) **(i)** State the order of lever used in the badge-making machine.

..... [1]

(ii) Indicate the positions of the load, effort and fulcrum on view **B**. [3]

(iii) Describe the conversion of motion that will take place when the lever is operated.

..... to ..... motion [2]

(iv) State the purpose of the spring labelled in view **A**.

..... [1]

DO NOT WRITE IN THIS MARGIN

(b) Fig. 11.2 shows a block and tackle mechanism.

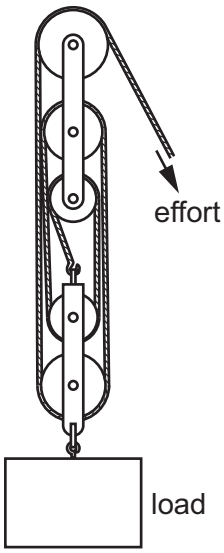

Fig. 11.2

(i) Calculate the effort needed to raise a load of 1250 N if the efficiency of the block and tackle is 88%.

.....

.....

.....

..... [4]

(ii) Explain the factors that could cause the block and tackle system to lose efficiency.

.....

.....

..... [2]

(iii) Give **two** ways that the efficiency could be increased.

1 .....

.....

2 .....

.....

[2]

DO NOT WRITE IN THIS MARGIN

(c) Fig. 11.3 shows a gravity fed oiler used to lubricate a shaft on an industrial machine.

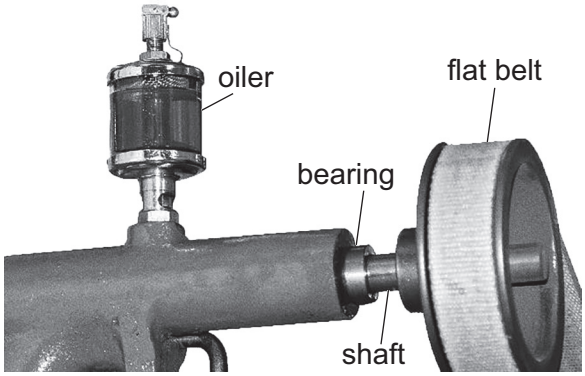

Fig. 11.3

(i) Describe the maintenance that needs to be carried out on the gravity fed oiler.

.....

.....

..... [2]

(ii) State the most likely type of bearing that will be fitted to allow the shaft to rotate.

..... [1]

(iii) Give **one** alternative type of bearing that will reduce the maintenance required.

..... [1]

(iv) Give **two** drawbacks of using a flat belt to transmit motion.

1 .....

.....

2 .....

.....
[2]

DO NOT WRITE IN THIS MARGIN

(v) Add sketches and notes to Fig. 11.4 to show **one** method of keeping a flat belt in tension.

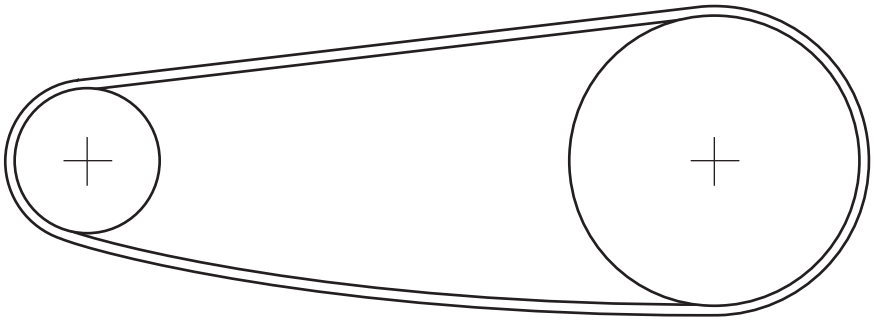

Fig. 11.4

[4]

DO NOT WRITE IN THIS MARGIN

12 Fig. 12.1 shows a conveyor belt used to move boxes in a manufacturing unit.
A sensor circuit will stop the conveyor belt when a box is between the light source and light sensor to allow boxes to be removed.

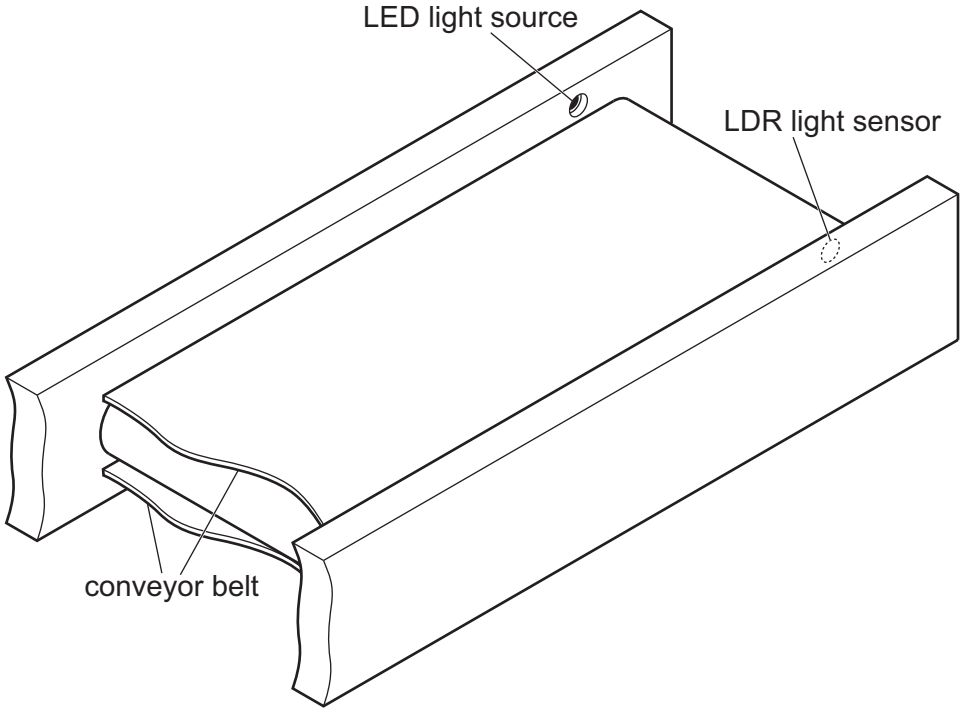

Fig. 12.1

(a) The conveyor belt circuit includes several components that have to be fitted the correct way around.

(i) State **one** method of identifying the negative leg (cathode) on the following components.

Signal diode .....

LED (light emitting diode) .....
[2]

(ii) Fig. 12.2 shows the symbol for an NPN transistor.

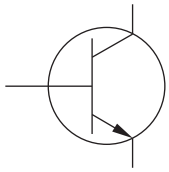

Fig. 12.2

Add labels to the symbol to identify the base (b), collector (c) and emitter (e). [2]

DO NOT WRITE IN THIS MARGIN

(iii) State the **two** possible functions of an NPN transistor in a circuit.

1 .....

2 .....
[2]

(b) Fig. 12.3 shows part of the sensor circuit used to stop the conveyor belt, allowing boxes to be removed by a worker.

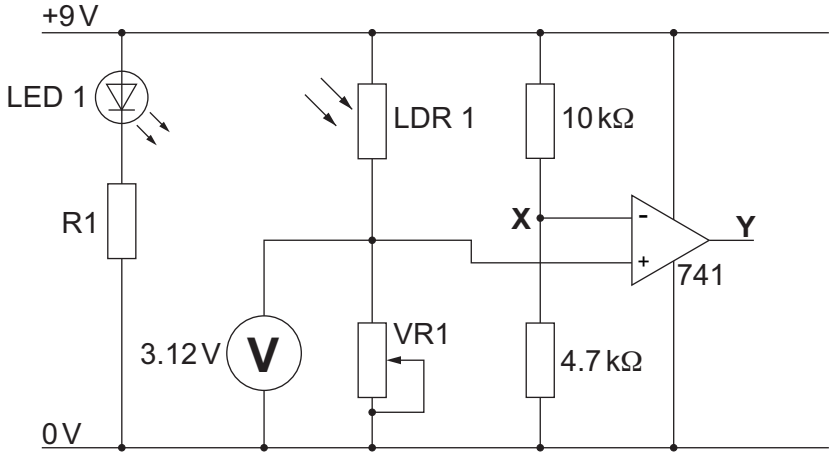

Fig. 12.3

(i) Calculate the voltage at point **X** in the circuit.

Use the formula $V_{out} = \frac{V_{in} \times R_2}{(R_1 + R_2)}$

.....

.....

.....

..... [3]

(ii) The 741 operational amplifier (OP AMP) is used as a comparator to compare the input voltages.
Explain the operation of the comparator.

.....

.....

..... [2]

(iii) State the voltage at point **Y**, the output of the OP AMP.

..... [1]

DO NOT WRITE IN THIS MARGIN

(iv) Describe how the OP AMP, which is in an 8 pin dual in-line package, can be correctly fitted into an integrated circuit (IC) holder.

.....

.....

..... [2]

(v) Fig. 12.4 shows three different types of component that could be used for VR1.

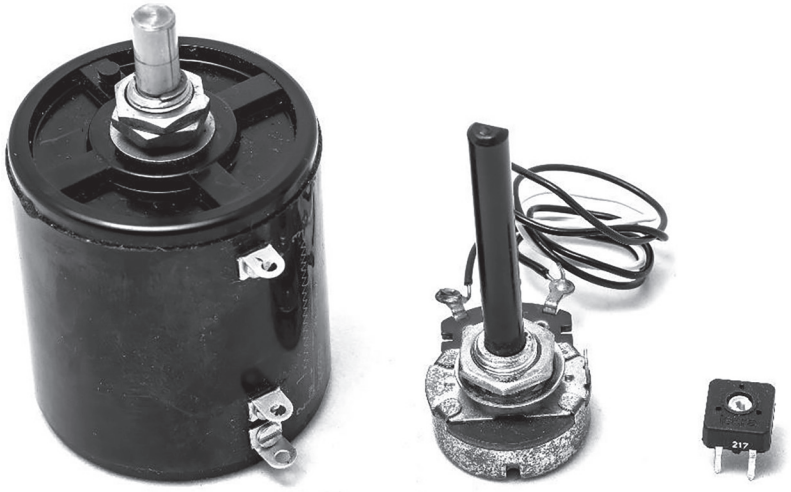

multi-turn (12 turns)	240° rotation	240° rotation
A	**B**	**C**

Fig. 12.4

Give **one** different benefit and **one** different drawback of using each type of component.

Component **A**

Benefit .....

Drawback .....

Component **B**

Benefit .....

Drawback .....

Component **C**

Benefit .....

Drawback .....

[6]

DO NOT WRITE IN THIS MARGIN

(c) Fig. 12.5 shows the output circuit used to operate the conveyor motor.

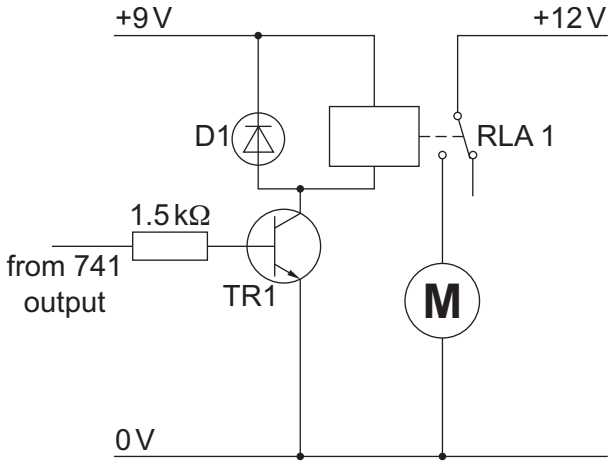

Fig. 12.5

(i) The motor is controlled by relay RLA 1.
Give **two** points that would appear in a technical description of the relay.

1 .....

2 .....
[2]

(ii) Fig. 12.6 shows an SPDT relay and the relay symbol. The relay has 5 connection points.

Fig. 12.6

Describe how the two connections for the coil can be identified using a multimeter.

.....

.....

.....

..... [3]

DO NOT WRITE IN THIS MARGIN

BLANK PAGE

DO NOT WRITE IN THIS MARGIN

BLANK PAGE

DO NOT WRITE IN THIS MARGIN

BLANK PAGE

Permission to reproduce items where third-party owned material protected by copyright is included has been sought and cleared where possible. Every reasonable effort has been made by the publisher (UCLES) to trace copyright holders, but if any items requiring clearance have unwittingly been included, the publisher will be pleased to make amends at the earliest possible opportunity.

To avoid the issue of disclosure of answer-related information to candidates, all copyright acknowledgements are reproduced online in the Cambridge Assessment International Education Copyright Acknowledgements Booklet. This is produced for each series of examinations and is freely available to download at www.cambridgeinternational.org after the live examination series.

Cambridge Assessment International Education is part of Cambridge Assessment. Cambridge Assessment is the brand name of the University of Cambridge Local Examinations Syndicate (UCLES), which is a department of the University of Cambridge.

© UCLES 2025

DO NOT WRITE IN THIS MARGIN